HYDRAULIC SCHEMATIC

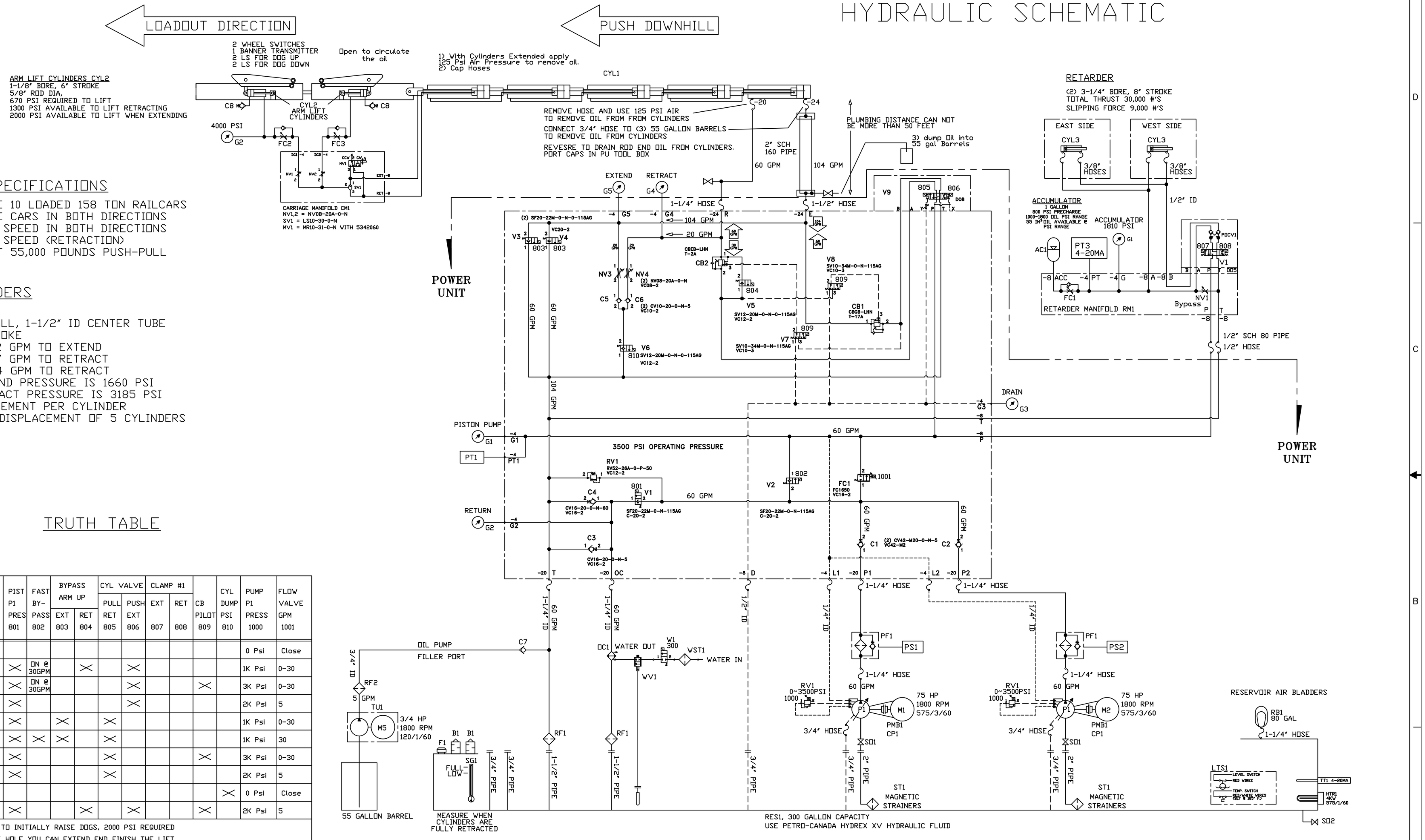

APPLICATION SPECIFICATIONS

INDEXER IS TO MOVE 10 LOADED 158 TON RAILCARS
INDEXER IS TO MOVE CARS IN BOTH DIRECTIONS
0-30 FPM VARIABLE SPEED IN BOTH DIRECTIONS
55 FPM RETRIEVING SPEED (RETRACTION)
INDEXER CAPABLE OF 55,000 POUNDS PUSH-PULL

INDEXER CYLINDERS

6-1/2" BORE
4-1/2" ROD, 1/2" WALL, 1-1/2" ID CENTER TUBE
188" EFFECTIVE STROKE
30 FPM REQUIRES 52 GPM TO EXTEND
30 FPM REQUIRES 27 GPM TO RETRACT
55 FPM REQUIRES 54 GPM TO RETRACT
55,000 POUNDS EXTEND PRESSURE IS 1660 PSI
55,000 POUNDS RETRACT PRESSURE IS 3185 PSI
13 GALLONS DISPLACEMENT PER CYLINDER
65 GALLONS TOTAL DISPLACEMENT OF 5 CYLINDERS

TRUTH TABLE

FUNCTION	PIST P1 PRES 801	FAST BY-PASS 802	BYPASS ARM UP EXT 803	BYPASS ARM UP RET 804	CYL VALVE PULL RET 805	CYL VALVE PUSH EXT 806	CLAMP #1 EXT 807	CLAMP #1 RET 808	CB PILOT 809	CYL DUMP PSI 810	PUMP P1 PRESS 1000	FLOW VALVE GPM 1001
IDLE											0 Psi	Close
PUSH 30 Fpm (Arms Down)	X	ON @ 30GPM		X		X					1K Psi	0-30
PUSH 30 Fpm (Arms Up)	X	ON @ 30GPM				X			X		3K Psi	0-30
STOP PUSH (Arms Up)	X					X					2K Psi	5
PULL 30 Fpm (Arms Down)	X		X		X						1K Psi	0-30
PULL 55 Fpm (Arms Down)	X	X	X		X						1K Psi	30
PULL 30 Fpm (Arms Up)	X				X				X		3K Psi	0-30
STOP PULL (Arms Up)	X				X						2K Psi	5
DROP ARMS										X	0 Psi	Close
RAISE ARMS	X			X		X			X		2K Psi	5
NOTE: USE CYLINDER EXTEND TO INITIALLY RAISE DOGS, 2000 PSI REQUIRED AFTER DOGS ARE OUT OF THE HOLE YOU CAN EXTEND END FINISH THE LIFT												

NOTE: WHEN ACTIVATING A RETARDER 305 AND 306 MUST BE TURNED OFF.

RETARDER CLAMP	X						X			2.8K Psi	5
RETARDER RELEASE	X							X		2.8K Psi	5

Rev	Description	Date
A		
	Revisions	

CERTIFIED FOR CONSTRUCTION
Potash Corp. Represenative _____ Date _____
Calbrandt Represenative Calvin Brandt Date 6/26/09

Unless otherwise noted dimensions are in inches

Tolerances
Unless otherwise noted

Bent Angle	±3°
Mach Angle	±1°
x/y	±.1500"
.x	±.0625"
.xx	±.0156"
.xxx	±.0050"

CALBRANDT, INC.
704 7th Street So.
Delano, MN 55328
Ph: 763 972-8888
Fax: 763 972-8128
www.brandtcompanies.com

DWG No: 507129K4hyd
Drafted By: Calvin Brandt
Draft Date: June 26th, 2009
Checked By:
Customer: POTASH—Allan, SK.
Size: D
Description: K4 HYDRAULIC SCHEMATIC
Scale: N/A
Sheet: 6 OF 10